# STEEL+ 1702

PLAYGROUND EQUIPMENT

| Device Specifications | |
|---|---|
| Safety zone | 23,14 m² |
| Length | 2,78 m |
| Width | 2,26 m |
| Total height | 3,15 m |
| Free fall height | 1,2 m |
| Age range | 3-14 years |
| In accordance w/ EN standards | 1176-1:2017-12 |
| Availability of spare parts | Yes |

Minimal space

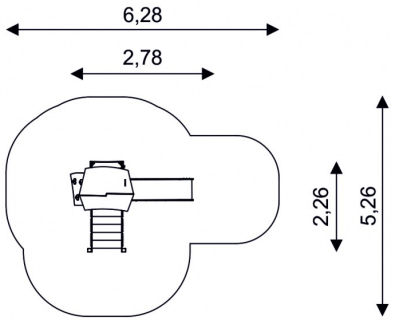


## Material Specification

- Galvanized and/or powder coated steel or stainless steel 80 x 80 mm construction;
- Panels and roofs are made of atmospheric condition resistant HDPE plates;
- Durable, anti-slip and waterproof square platforms and climbing walls made of HPL;
- Screws covered with plastic caps or made of stainless steel;
- Top of the construction is secured with rubber caps;
- No sharp edges or chinks that would pose a danger of jamming the head, fingers or any other body parts;
- Stainless steel slide with HDPE sied panels;
- Durable, colorful climbing rocks;

## Additional comments

- Depth of foundations on a flat surface: 80/70/60 cm;
- The equipment is designed for public playgrounds;
- The equipment render is of an illustrative nature and shows only the general specification of the equipment, but not its actual appearance.
- The colours may differ from those demonstrated on render.
- Slides should not be installed southwards;

## Surfaces

Due to the free fall height of the equipment, the EN 1176-1:2017 standard allows the following surfaces: sand with minimal layer thickness of 30 cm (A,C), synthetic material approved for free fall of 1,20 m (A,B,C)

**Prosta Office Centre**
ul. Prosta 51, 00-838 Warszawa
e-mail: info@vinci-play.com
Tel: (22) 499 39 91

**Vinci Play**
**Production and warehouses**
ul. Seminaryjna 9, 99-400 Łowicz
e-mail: info@vinci-play.com
Tel: 793 404 991